A Nidec Group Company
Nidec Motors & Actuators
All for dreams

Series GMPG
Motor type 404 166

Design Data	
Commutation	Brushed
Direction of rotation	Bi-directional
Bearing type	

0225 AL

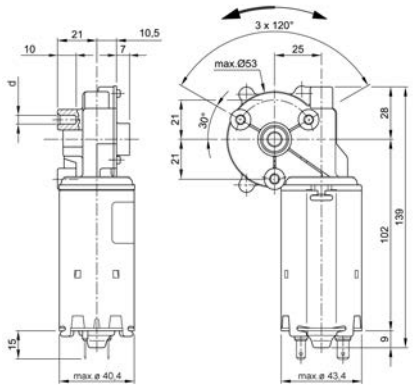

Performance data		
Rated voltage [V]	U_N	12
Nominal torque [Nm]	M_N	0.50
No-load speed [min^{-1}]	n_0	60.0
Nominal power [W]	P_N	2.83
Nominal current [A]	I_N	2.0
Nominal force [kN]	F_N	0.00
Duty cycle		s1

Sensor data	
Pulses	0
Output channels	0

Other data	
Gear ratio	62/1
Gear wheel material	Plastic
Suppression components	
Enclosure class	IP30
Weight [kg]	0.710

Remarks:

Motor picture

Characteristic curves

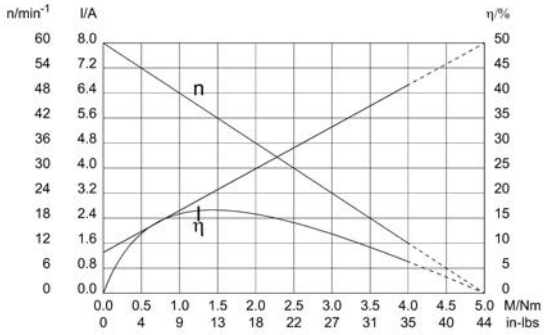

Output shaft drawing (W), Wiring diagrams (S) and Connector layout (K)

W 148

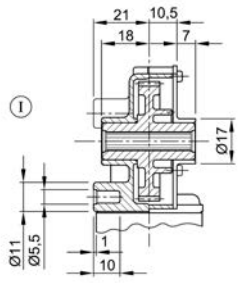

I Tapered splines 7 x 8 DIN 5481
continuous

S 28

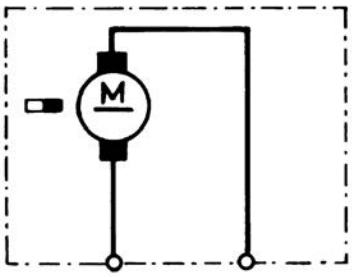

K 117

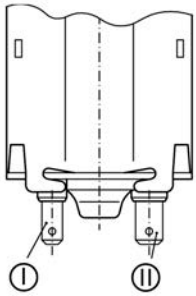

I Blade terminal ends 4,8 x 0,8 DIN 46 244
II Blade terminal ends 6,3 x 0,8 DIN 46 244