DYNABOX®

RIGHT ANGLE SERVO GEARHEADS

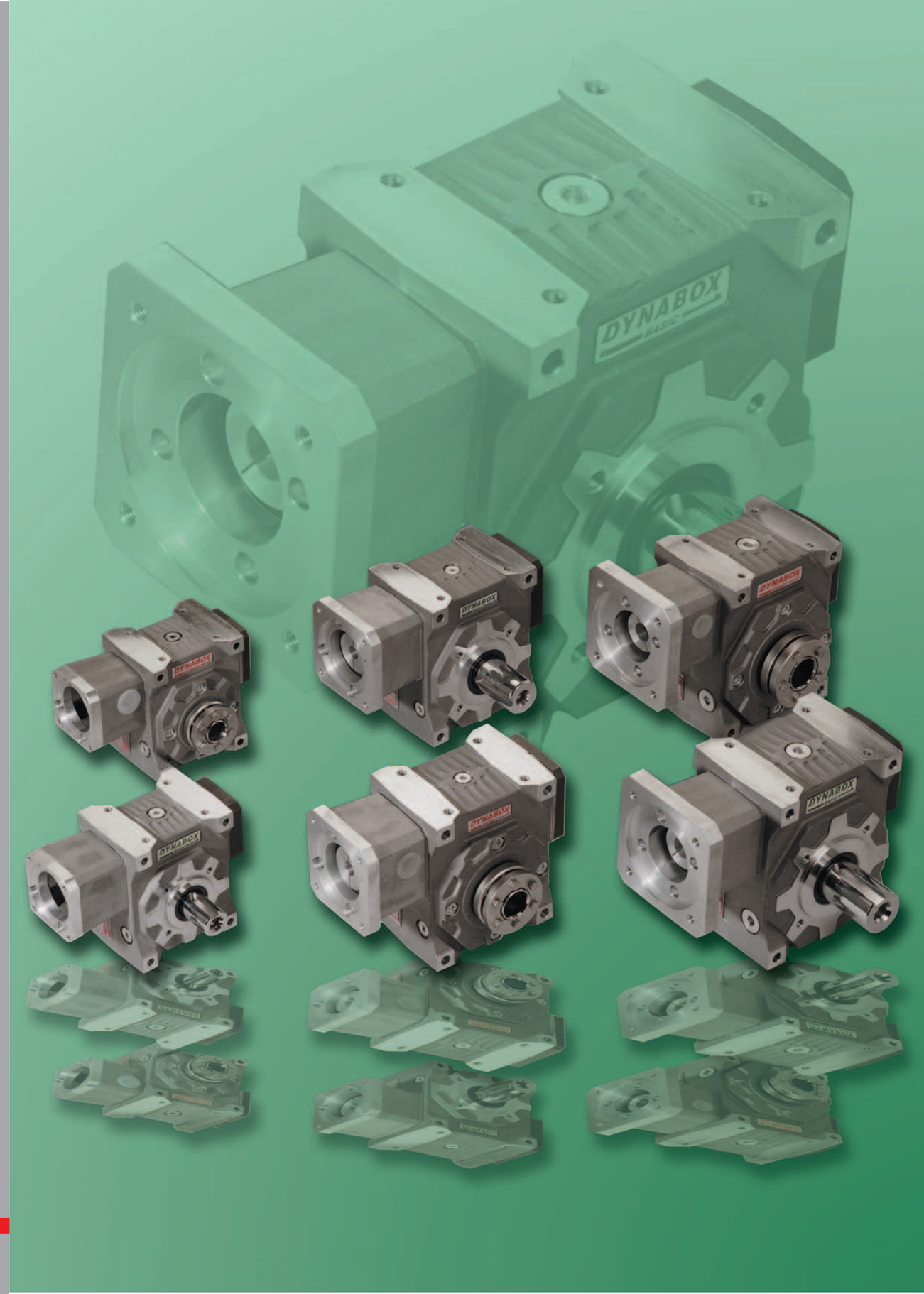

GIRARD TRANSMISSIONS
PRECISION GEARHEADS

April 2008

DYNABOX® HIGHLIGHTS

Preloaded input taper bearings :

provides higher stiffness.
2 bearings mounted on same side insure constant preload while temperature raises.
It maximizes bearing life.
On the opposite side, an axial-free ball bearing.

Optimized contact pattern : a unique process to cut gears, combined to a state of the art assembly lead to a nearly 90% pattern surface, reducing drastically the contact pressure.

Special bronze alloy : developped by ourselves, it provides an unmatched wear resistance. Combined with 90% contact pattern, lowest backlash is maintained throughout the working life of the gearhead.

Thanks to that, *DYNABOX*® gearheads can run up to 6000RPM
Apparently similar products available on the market do not offer such performance

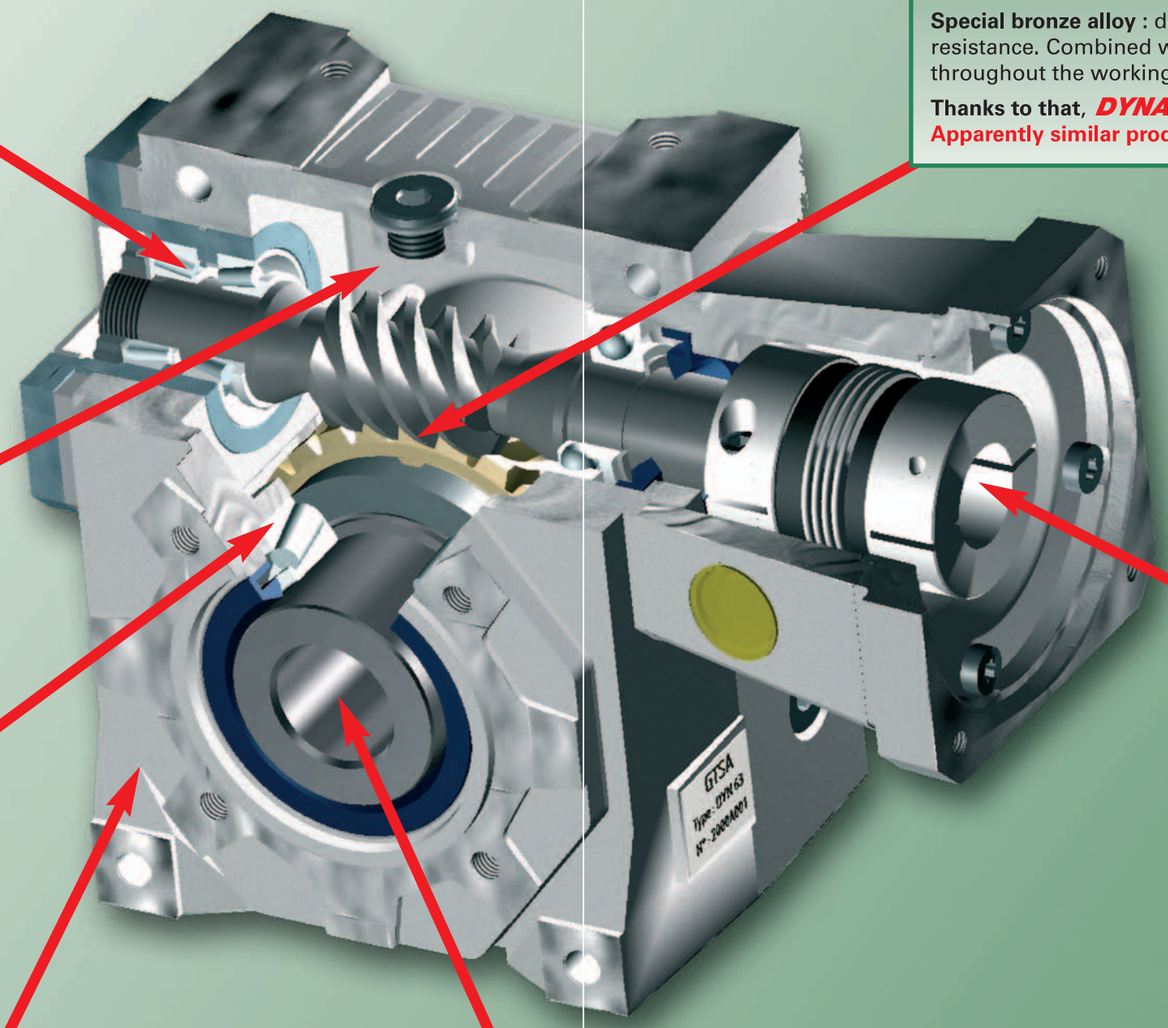

Maintenance free :

life-lubricated unit with high performance synthetic lubricant

Servomotor mounted within 5 minutes :

a high stiffness below coupling eliminates shaft alignement problems.
A mating flange to ***your*** servomotor can always be supplied from our stock.

Oversized taper roller bearings, providing unmatched radial loads (size 25 = ball bearings)

Single piece housing, made of cast and heat treated aluminium-magnesium alloy. Offering superior rigidity and low weight

Output torsional backlash available in 3 ranges :

EXPERT : 1 arcminute for the most demanding applications
MEDIUM : 5 arcminutes, a good compromise price/quality
BASIC : 10 arcminutes, a budget gearhead to cut servo system costs

CONNECTING KIT *DYNABOX*® -SERVOMOTOR

TORSION STIFF COUPLINGS

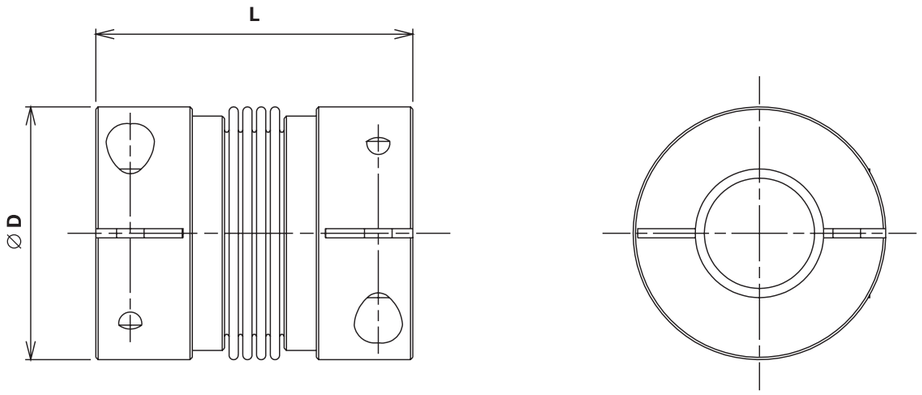

Coupling reference		AM N° 5	AM N° 10	AM N° 15	AM N° 30	AM N° 60	AM N° 80
∅ servo shaft and *DYNABOX* shaft	mm	<∅16	<∅24	<∅28	<∅32	<∅35	<∅42
Servo nominal torque	Nm	5	10	15	30	60	80
Servo peak torque	Nm	7,5	15	22,5	45	90	120
∅ D	mm	32	40	49	55	66	82
L	mm	42	46	60	70	81	94
Polar moment of inertia	10^{-3}kgm²	0,01	0,02	0,05	0,09	0,18	0,54
Torsional stiffness	Nm/arcmin	2	2,6	6	11	22	37
Tightening torque of campling screws	Nm	4	4,5	9	14	35	70

Specify the coupling reference and the servo shaft ∅ when ordering.

Exemple : AM n° 15 ∅ 14.

To calculate the input total inertia, add the coupling iner-

CONNECTING FLANGE

Select the required flange on page 15.

If no flange can be found in the list, supply the dimensions from A to Z, or supply the servo reference when ordering.

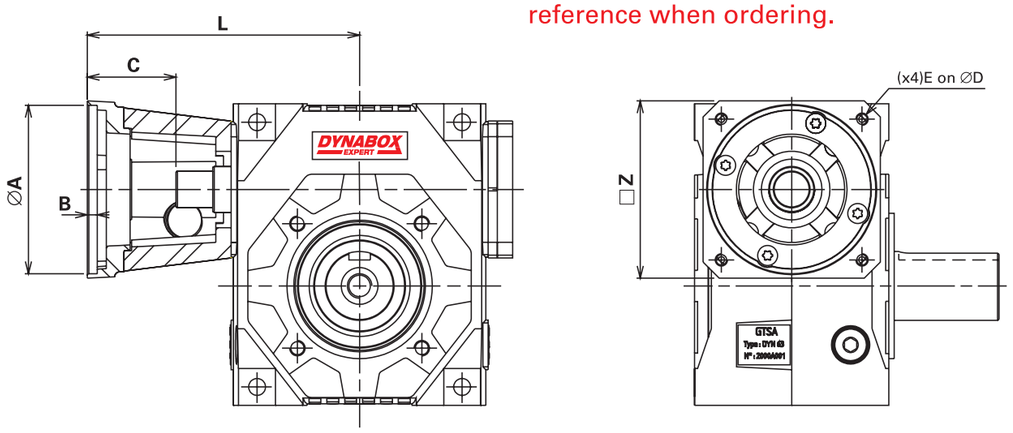

DYNABOX	Reference	A	B	C*	D	E	L	Z
25	BM-F46/30	30	4	27	46	M3	80	58
	BM-F63/40	40	4	27	63	M4	80	65
	BM-F70/50	50	4	32	70	M4	85	65
	BM-F75/60	60	4	32	75	M5	85	65
	BM-F90/70	70	4	32	90	M5	85	90
	BM-F95/70	50	4	32	95	M6	85	90
	BM-F100/80	80	5	42	100	M6	95	90
	BM-F115/95	95	5	52	115	M8	105	105
35	BM-F63/40	40	4	32	63	M4	111	65
	BM-F70/50	50	4	35	70	M4	114	65
	BM-F75/60	60	4	35	75	M5	114	65
	BM-F90/70	70	4	45	90	M5	124	90
	BM-F95/50	50	4	35	95	M6	114	90
	BM-F100/80	80	5	45	100	M6	124	90
	BM-F115/95	95	5	45	115	M8	124	118
	BM-F130/95	95	5	55	130	M8	134	118
	BM-F130/110	110	5	55	130	M8	134	118
	BM-F145/110	110	6,5	65	145	M8	144	118
45	BM-F70/50	50	4	35	70	M4	135	81
	BM-F75/60	60	4	35	75	M5	135	81
	BM-F90/70	70	4	45	90	M5	145	91
	BM-F95/50	50	4	35	95	M6	135	91
	BM-F100/80	80	5	45	100	M6	145	91
	BM-F115/95	95	5	45	115	M8	145	115
	BM-F130/95	95	5	55	130	M8	155	115
	BM-F130/110	110	5	55	130	M8	155	115
	BM-F145/110	110	6,5	65	145	M8	165	140
	BM-F165/110	110	6,5	55	165	M10	155	140
	BM-F165/130	130	6,5	55	165	M10	155	140
55	BM-F70/50	50	4	35	70	M4	146	81
	BM-F75/60	60	4	35	75	M5	146	81
	BM-F90/70	70	4	45	90	M5	156	91
	BM-F95/50	50	4	35	95	M6	146	91
	BM-F100/80	80	5	45	100	M6	156	91
	BM-F115/95	95	5	45	115	M8	156	115
	BM-F130/95	95	5	55	130	M8	166	115
	BM-F130/110	110	5	55	130	M8	166	115
	BM-F145/110	110	6,5	65	145	M8	176	140
	BM-F165/110	110	6,5	55	165	M10	166	140
	BM-F165/130	130	6,5	55	165	M10	166	140
63	BM-F70/50	50	4	40	70	M4	160	102
	BM-F75/60	60	4	40	75	M5	160	102
	BM-F90/70	70	4	46	90	M5	166	102
	BM-F100/80	80	5	46	100	M6	166	102
	BM-F115/95	95	5	46	115	M8	166	115
	BM-F130/95	95	5	56	130	M8	176	115
	BM-F130/110	110	5	56	130	M8	176	115
	BM-F145/110	110	6,5	66	145	M8	186	140
	BM-F165/110	110	6,5	56	165	M10	176	140
	BM-F165/130	130	6,5	56	165	M10	176	140
	BM-F200/114,3	114,3	6,5	86	200	M10	206	185
	BM-F215/130	130	6,5	66	215	M12	186	185
	BM-F215/180	180	6,5	66	215	M12	186	185
75	BM-F70/50	50	4	40	70	M4	185	102
	BM-F75/60	60	4	40	75	M5	185	102
	BM-F90/70	70	4	46	90	M5	191	102
	BM-F100/80	80	5	46	100	M6	191	102
	BM-F115/95	95	5	46	115	M8	191	115
	BM-F130/95	95	5	56	130	M8	201	115
	BM-F130/110	110	5	56	130	M8	201	115
	BM-F145/110	110	6,5	66	145	M8	211	140
	BM-F165/110	110	6,5	56	165	M10	201	140
	BM-F165/130	130	6,5	56	165	M10	201	140
	BM-F200/114,3	114,3	6,5	86	200	M10	231	185
	BM-F215/130	130	6,5	66	215	M12	211	185
	BM-F215/180	180	6,5	66	215	M12	211	185
90	BM-F100/80	80	4	46	100	M6	205,5	123
	BM-F115/95	95	5	46	115	M8	205,5	123
	BM-F130/95	95	5	56	130	M8	215,5	123
	BM-F130/110	110	5	56	130	M8	215,5	123
	BM-F145/110	110	6,5	66	145	M8	225,5	140
	BM-F165/110	110	6,5	56	165	M10	215,5	140
	BM-F165/130	130	6,5	56	165	M10	215,5	140
	BM-F200/114,3	114,3	6,5	86	200	M10	245,5	185
	BM-F215/130	130	6,5	66	215	M12	225,5	185
	BM-F215/180	180	6,5	66	215	M12	225,5	185
	BM-F300/250	250	6,5	88	300	M14	247,5	260
110	BM-F100/80	80	4	46	100	M6	229	123
	BM-F115/95	95	5	46	115	M8	229	123
	BM-F130/95	95	5	56	130	M8	239	123
	BM-F130/110	110	5	56	130	M8	239	123
	BM-F145/110	110	6,5	66	145	M8	249	140
	BM-F165/110	110	6,5	56	165	M10	239	140
	BM-F165/130	130	6,5	56	165	M10	239	140
	BM-F200/114,3	114,3	6,5	86	200	M10	269	185
	BM-F215/130	130	6,5	66	215	M12	249	185
	BM-F215/180	180	6,5	66	215	M12	249	185
	BM-F300/250	250	6,5	88	300	M14	271	260

*** A spacer can be supplied if motor shaft length is longer than C dimension (specify it when ordering)**